QUILINOX®
ALL ABOUT FLUIDS

Sanitary Gaskets

Property of Ultrapharma BV

Table of Contents

1. Introduction 4
2. Compounds 4
3. FTIR Spectroscopy analysis 6
4. Compound options 8
5. Gasket design 16
6. Type 1, 2 & 3 (unflanged & flanged & double flanged) 23
7. UP Partnr. Configurator 25
8. Dimensional Chart 26

1. Introduction

Founded in 2002 and rapidly growing the market for Sanitary Gasket solutions in Europe, we have become a recognized partner for many companies World Wide.
We manufacture a complete range of gaskets for the Pharmaceutical and Biotech industries. We understand the need for credentials that support the quality of our products. Reliable and consistent information supported by fast services gave us a solid track record. We understand what is required to be a trustworthy partner.

We continuously seek for innovative solutions for problems we encounter, knowing that some of these are as old as the industry itself. With our R&D engineers we are ready to face these challenges.

Ultrapharma BV is ISO 9001:2015 certified.

2. Compounds

Today the need for traceability for contact material in the pharmaceutical industry is eminent. We need to know what we are getting and we need to know if the supply chain is consistent time after time.

One way to secure consistency is to introduce compound numbers. If compound numbers are linked to product numbers one creates the condition that the manufacturer cannot change from one compound to another. Once a gasket is validated and known by its compound and part number there is no possibility to change things. This is what we are seeking for in today´s industry.

Most pharmaceutical companies require a written notification for any change in the manufacturing process including compound changes. The impact of compound changes can be severe, is expensive and time consuming, in which no one is eager to get involved with.

This is why Ultrapharma is introducing designated compound numbers for all products.

Compound Data Sheets will tell exactly what the compound is all about including all its credentials such as FDA-CFR listing, USP Class VI and other relevant test criteria. All clients of Ultrapharma have access to these Compound Data Sheets (CMD), they can advise pharmaceutical end-users of the existence and determine which compound to use for their applications. The compound number that has been chosen can be referred to at any point in time when ordering new gaskets.

The Certificates of Conformance that we generate for all products are now made automatically within our ERP system. The compound data is stored in our SAP system, all information about lot numbers is centralized. In the final stage all information is gathered and printed on the Certificate of Conformance. All is based on the one specific compound fully traceable.

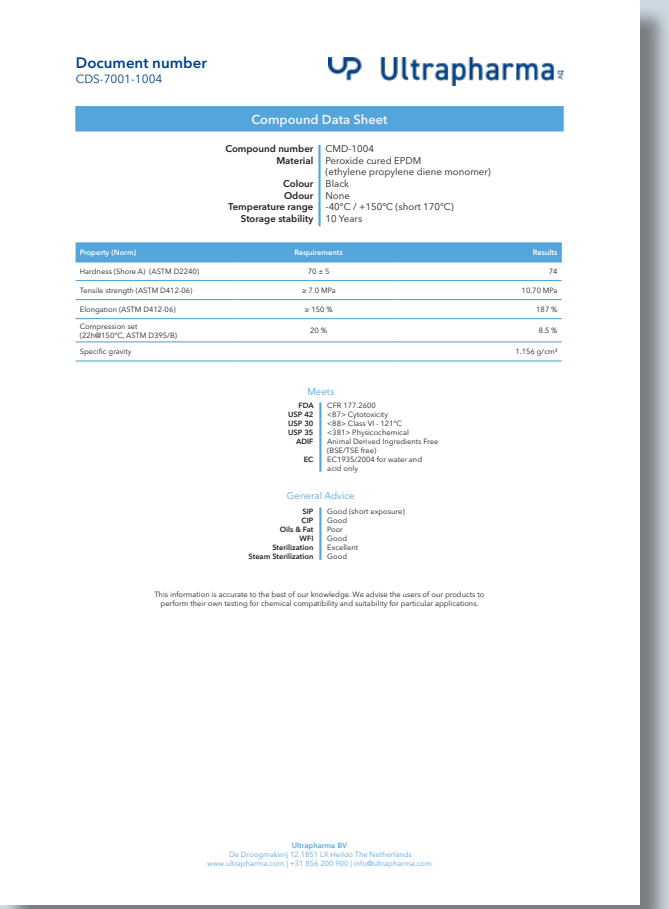

Document number
CDS-7001-1004

Ultrapharma bv

Compound Data Sheet

Compound number	CMD-1004
Material	Peroxide cured EPDM (ethylene propylene diene monomer)
Colour	Black
Odour	None
Temperature range	-40°C / +150°C (short 170°C)
Storage stability	10 Years

Property (Norm)	Requirements	Results
Hardness (Shore A) (ASTM D2240)	70 ± 5	74
Tensile strength (ASTM D412-06)	≥ 7.0 MPa	10.70 MPa
Elongation (ASTM D412-06)	≥ 150 %	187 %
Compression set (22h@150°C, ASTM D395/B)	20 %	8.5 %
Specific gravity		1.156 g/cm³

Meets

FDA	CFR 177.2600
USP 42	<87> Cytotoxicity
USP 30	<88> Class VI - 121°C
USP 35	<381> Physicochemical
ADIF	Animal Derived Ingredients Free (BSE/TSE free)
EC	EC1935/2004 for water and acid only

General Advice

SIP	Good (short exposure)
CIP	Good
Oils & Fat	Poor
WFI	Good
Sterilization	Excellent
Steam Sterilization	Good

This information is accurate to the best of our knowledge. We advise the users of our products to perform their own testing for chemical compatibility and suitability for particular applications.

Ultrapharma BV
De Droogmakerij 12 1851 LX Heiloo The Netherlands
www.ultrapharma.com | +31 856 200 900 | info@ultrapharma.com

3. FTIR Spectroscopy analysis

On every batch of material that passes our QC we perform a FTIR analysis, using our Bruker Alpha II. FTIR analysis measures the range of wavelengths in the infrared region that are absorbed by a material. This is accomplished through the application of infrared radiation (IR) to samples of a material. The sample's absorbance of the infrared light's energy at various wavelengths is measured to determine the material's molecular composition and structure.

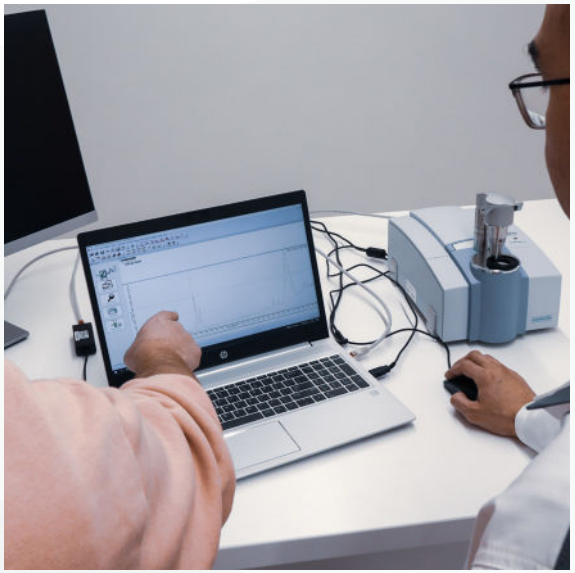

This technique allows us to make a fingerprint of each batch that is made. We use a master batch as our reference for EPDM for example. Each new batch is compared against the master batch. Deviations in our compound recipe will be visible in the analysis and will raise a red flag.

With this FTIR analysis we can secure consistency in our raw material and the final product. It is essential that the end user receives gaskets that are made in the same composition as previous batches. We take a fingerprint of each batch, and store that data. Individual spectra can be obtained by contacting our sales department.

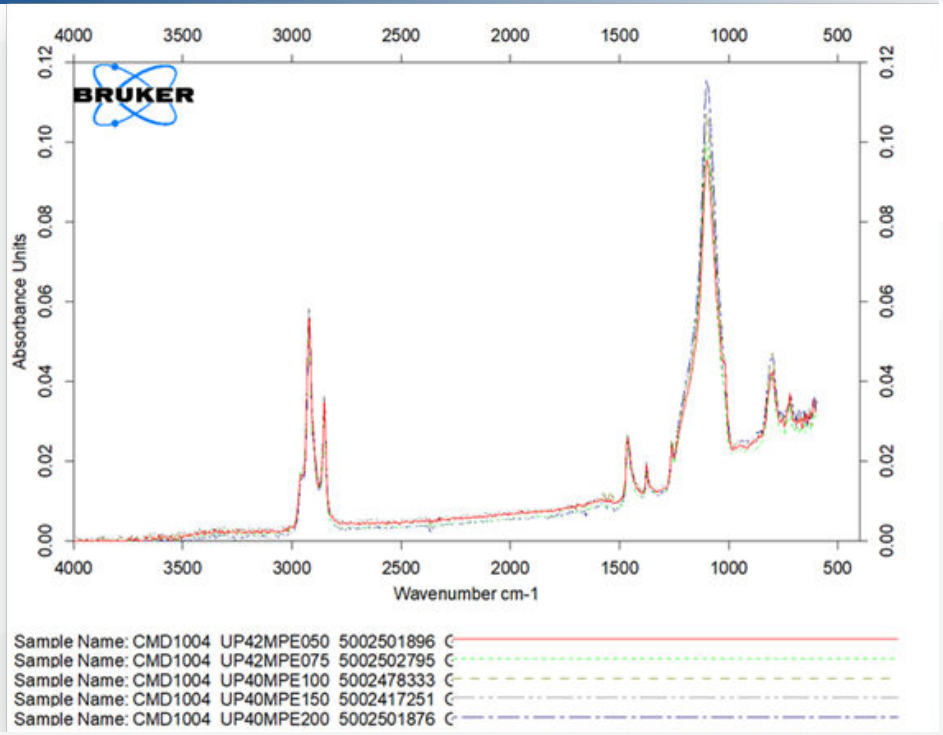

This is the analysis of multiple gaskets in our material CMD-1004, different LOT numbers. By identifying and comparing the peaks at certain wavelengths we can guarantee the consistency of this material.

This is the analysis of two EPDM gaskets, but different manufacturers. Each manufacturer uses its own recipe to make their base compound EPDM for example. A spectroscopy taken from each individual manufacturer's EPDM will show all different spectra. Deviations are interpreted similar as a human fingerprint. It is impossible to make an identical compound if you do not know the recipe. Point we are making is that although the gasket is made from EPDM and it looks black. It might not be the same as what you have used before.

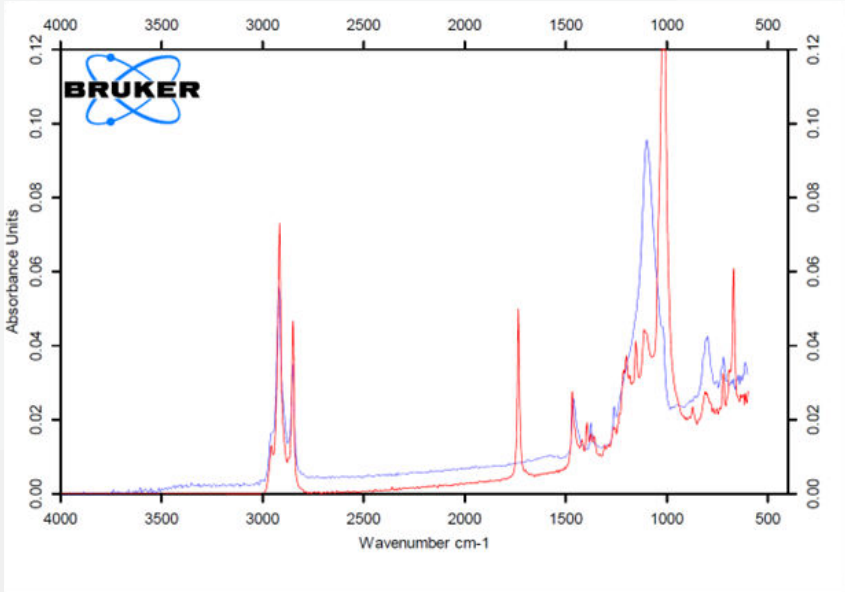

Sanitary Gaskets
24/01/2025

4. Compound options

We can provide sanitary gaskets in many different compounds and colors, all with different characteristics. You can decide which compound suits your application best, or we can help you decide.

Our standard sanitary gasket compounds are in the table below. We have more compounds available with specific characteristics, the table represents the most popular types. We produce many special products such as Screens and Orifice plates those are made in a selection from our standard compounds.

For more detailed information and all the test results per material you can request our validation guides.

Compound number	Material	FDA CFR 177.2600	USP Cytotoxicity <87>	USP Class VI-121° <88>	USP Physicochemical testing <661>	EC10	Conform ADIF
CMD-1018	PTFE WHITE	✓	✓	✓	✓	✓	✓
CMD-1019	STEAM-FLON BRONZE	✓	✓	✓	✓	✓	✓
CMD-1020	TRI-BOND WHITE/BLACK	✓	✓	✓	✓	✓	✓
CMD-1028	TFM WHITE	✓	✓	✓	✓		✓
CMD-1061	TRI-BOND TRANSLUCENT	✓	✓	✓			✓

Compound number	Material	FDA CFR 177.2600	USP Cytotoxicity <87>	USP Class VI-121° <88>	USP Physico-chemical testing <381>	EP 3.1.9	EC1935/2004	ADIF
CMD-1004	EPDM BLACK	✓	✓	✓	✓		✓	✓
CMD-1005	EPDM WHITE	✓	✓					✓
CMD-1006	EPDM BLUE	✓	✓				✓	✓
CMD-1010	FKM/FPM BLACK	✓	✓	✓			✓	✓
CMD-1011	FKM/FPM WHITE	✓	✓					✓
CMD-1012	PLATINUM SILICONE TRANSLUCENT	✓	✓	✓		✓		✓
CMD-1013	PEROXIDE SILICONE TRANSLUCENT	✓	✓					✓
CMD-1015	PEROXIDE SILICONE RED	✓	✓	✓			✓	✓
CMD-1027	PEROXIDE SILICONE WHITE	✓	✓					✓
CMD-1065	PLATINUM SILICONE WHITE	✓	✓					✓
CMD-1071	PLATINUM SILICONE TRANSPARENT	✓	✓	✓		✓		✓
CMD-1084	PLATINUM SILICONE WHITE	✓	✓					✓

EPDM

EPDM, Ethylene Propylene Diene Monomer, is an "M" class synthetic rubber elastomer. The M class comprises elastomers having a saturated chain of the polyethylene type (the M deriving from the more correct term polymethylene) EPDM is one of the most popular and versatile polymer in sealing applications. It remains flexible in a wide range of temperatures, this is why it has excellent sealing capacities.

Chemically, EPDM has good resistance to animal oils, vegetable oils, ozone, strong chemicals, and oxidizing chemicals. Do not use EPDM gaskets for mineral oils, solvents, or aromatic hydrocarbons.

General Advice

SIP --------- Good short exposure
CIP ---------- Good
Minerals Oils & Grease ----- Poor
WFI ---------- Good
Sterilization ---------- Excellent
Stam sterilization ---------- Good

Working temperature and pressure
The working range of CMD-1004 is -40°C to 150°C short 170°C. The gaskets can be used up to 10 Bar at 20°C.

Typical general characteristics	Inspection Method	Requirements	Value
Hardness (Shore A)	ASTM D2240	70±5	74
Tensile strength (MPa)	ASTM D412-06	7.0(min)	10.7
Elongation (%)	ASTM D412-06	150 (min)	187
Compression set, 22hrs @ 150°C	ASTM D395/B	20%	8.5
Specific Gravity (g/cm³)			1.156

Platinum Silicone

Silicone is widely used in pharmaceutical applications for two major reasons. First, and foremost, is safety. Silicone does not contain plasticizers or other additives that could leach into a drug product and cause toxicological issues. Second, silicone is highly flexible and tear-resistant, making it a good choice for sealing fluids in downstream processes.

In order to make silicone gaskets there are two cure system options with silicones, however, that produces materials with different characteristics, whose impact should be considered before selection. Silicone materials may be cured using free radical (peroxide) or addition (platinum) cure mechanisms.

Platinum-cured and peroxide-cured silicone gaskets can both be made to USP Class VI and other industry specifications, but a platinum-cured gasket has a higher purity and lower leachability than peroxide-cured silicone.

General Advice

SIP ----------Very good
CIP ---------- Very good
Minerals Oils & Grease ------ Poor
WFI ---------- Good
Sterilization ---------- Excellent
Steam Sterilization------- Excellent

Working temperature and pressure
The working range of platinum silicone is -60°C to 200°C. Platinum Silicone gaskets can be used up to 10 Bar at 20°C.

Typical general characteristics	Inspection Method	Requirements	Value
Hardness (Shore A)	ISO 7619-1	75±5	76
Appearance			Transparent / Translucent
Tensile strength (N/mm²)	ISO 37 Type 1	7.0(min)	8.2
Elongation (%)	ISO 37 Type 1	200 (min)	268
Tear strength (N/mm)	ASTM D 624 B	10.0(min	12
Specific Gravity (g/cm³)	ISO 1183-1		1.15

PTFE

PTFE, together with the other fluorine-containing plastics, form a specific group within the high-performance plastics. PTFE or Polytetrafluoroethylene is a synthetic polymer consisting of two simple elements; Carbon and Fluorine. It is derived from Tetrafluoroethylene (TFE) and has some unique properties that make it a very useful sealing material.

PTFE is resistant to almost all chemicals, is flame-retardant and easy to sterilize, has excellent UV resistance and remarkable non-stick properties. PTFE has one of the lowest coefficients of friction of any solid. The intrinsic purity of the material makes PTFE suitable for direct food contact. It is non-reactive, partly because of the strength of carbon–fluorine bonds. PTFE is hydrophobic: neither water nor water-containing substances wet PTFE.
A disadvantage of virgin PTFE is that the material can start "moving" with thermal changes, which is known as cold-flow. The wear, compression resistance and cold-flow can be greatly improved by adding additives such as stainless steel powder, which is also a material in our range called Steam-Flon®.

Unique features of PTFE

Chemically inert
Non-stick material
Low coefficient of friction
Non-flammable
Hydrophobic
FDA approved

General Advice

SIP ---------- Very good
CIP ---------- Very good
Minerals Oils & Grease -------- Very good
WFI ---------- Excellent
Sterilization ---------- Excellent
Stam sterilization ---------- Excellent
Gamma radiation --- Not recommended

Working temperature and pressure
The temperature working range of PTFE is -75°C to 260°C. PTFE gaskets can be used up to 10 Bar at 20°C.

Typical general characteristics	Inspection Method	Requirements	Value
Hardness (Shore D)	ASTM D2240-04	60±5	62
Tensile strength (PSI)	ASTM D4894	15 (min)	4000
Elongation (%)	ASTM D4894	NA	350
Specific gravity (g/cm3)			2,15
Deformation under L 2175 psi – 100hrs			17%

TFM

TFM, the second generation PTFE, is a chemically modified PTFE. Its unique property profile makes it suitable for applications that would otherwise be out of reach of the PTFE materials group. This includes in particular those products that can only be manufactured using special welding methods. Ultrapharma uses welding methods to produce products like PTFE gaskets with screens or orifice plates.

TFM differs from standard PTFE by its reduced molecular weight as well as its proportion of comonomer Perfluoropropylvinylether(PPVE). These two factors, which are well matched to each other, lead to a high performance product that sets itself apart from standard PTFE through the following advantages:

- Lower deformation under load
- Improved weldability
- Higher transparency facilitates the checking of purity
- Higher breaking elongation
- Higher tensile strength at higher temperatures
- Lower gas permeability

Because the modifier content is very low (less than 1%) TFM can still be classified as a nanopolymer under ISO 12086 and it doesn't lose the typical properties of conventional PTFE.

General Advice

SIP ---------- Very good
CIP ---------- Very good
Minerals Oils & Grease -------- Very good
WFI ---------- Excellent
Sterilization ---------- Excellent
Stam sterilization ---------- Excellent
Gamma radiation --- Not recommended

Working temperature and pressure
The temperature working range of TFM is -75°C to 260°C. TFM gaskets can be used up to 10 Bar at 20°C.

Typical general characteristics	Inspection Method	Requirements	Value
Hardness (Shore D)	ASTM D2240-04	60±5	62
Tensile strength (PSI)	ASTM D4894	15 (min)	4600
Elongation (%)	ASTM D4894	NA	450
Specific gravity (g/cm3)			2,16
Deformation under L 2175 psi – 100hrs			9%

Steam-Flon

Ultrapharma has developed the material Steam-Flon® for sanitary gaskets and other innovative products. This material is a unique blend of non-pigmented PTFE and 316L stainless steel powder. The mechanical properties of this compound are very interesting because it virtually eliminates the cold flow problems we experience with, for example, virgin PTFE gaskets.

Cold Flow

Cold flow is the term we use for the movement of plastic under permanent load/stress, a state that is used with static seals. Cold flow increases at elevated temperatures. Material of the gasket is slowly moving towards the inside of the fitting and creates a bead. This bead leads to flow restriction and is a potential area for particles/bacterial entrapment. The Steam-Flon® material takes the cold flow out of the equation, creating a very stable seal with no leaks even at large temperature fluctuations.

For Steam-Flon material the specification is:
Deformation under Load
14 MPa - 24 hrs @ 23°C = 5%

For standard PTFE it is:
Deformation under Load
14 MPa - 24 hrs @ 23°C = 15%

General Advice

SIP ---------- Excellent
CIP ---------- Excellent
Minerals Oils & Grease --- Excellent
WFI ---------- Excellent
Sterilization ---------- Excellent
Stam sterilization ---------- Excellent
Gamma radiation --- Not recommended

Working temperature and pressure
The temperature working range of Steam-Flon® is -195°C to 288°C. Steam-Flon® gaskets can be used up to 10 Bar at 20°C.

Typical general characteristics	Inspection Method	Requirements	Value
Hardness (Shore D)	ISO 868	65±5	65
Tensile strength (MPa)	ISO 37	15(min)	16.6
Elongation (%)	ASTM D4894	NA	258
Specific Gravity (g/cm³)			3.30
Deformation under L 14 MPa - 24hrs @ 23°C			5%

Tri-Bond

Elastomer gaskets are known for their superb sealing capability but are more susceptible to chemicals. PTFE is chemically inert but is a difficult material when it comes to sealing. The best characteristics of both materials are brought together in the Tri-Bond® gasket. The thin PTFE lining on the outside is taking care of the chemical resistance of the gasket while the flexible elastomer inside covers its sealing capabilities. The combination of these features makes this the ultimate pharmaceutical gasket.

Bonding PTFE to an elastomer

Polytetrafluoroethylene or PTFE, is known as a non-stick or slippery material. It is made up of very stable chemical bonds and is chemically inert, the surface does not react with any chemical molecules it comes into contact with. This is why PTFE is very difficult to bond to anything else. The surface needs to be modified to make it possible to make a bond to the elastomer.

Our Tri-bond® gaskets are irreversibly bonded. Which means that when the gasket is exposed to pressure, steam or chemicals, the elastomer and PTFE won't come loose. This makes the two materials in the gasket working together perfectly and you get the best of both materials.

General Advice

SIP ---------- Good
CIP ---------- Very good
Minerals Oils & Grease -------- Very good
WFI ---------- Excellent
Sterilization---------- Excellent
Stam sterilization ---------- Excellent
Gamma radiation --- Not recommended

Working temperature and pressure
The temperature working range of Tri-bond® (PTFE/EPDM) is -30°C to 155°C.
Tri-bond® gaskets can be used up to 10 Bar at 20°C.

The temperature working range of Tri-bond® (PTFE/FKM) is -30°C to 175°C.
Tri-bond® gaskets can be used up to 10 Bar at 20°C.

EPDM

Typical general characteristics	Inspection Method	Requirements	Value
Hardness (Shore D)	ASTM D2240-04	60±5	62
Tensile strength (PSI)	ASTM D4894	15 (min)	4600
Elongation (%)	ASTM D4894	NA	450
Specific gravity (g/cm3)			2,16
Deformation under L 2175 psi – 100hrs			9%

FKM

Typical general characteristics	Inspection Method	Requirements	Value
Hardness (Shore D)	ASTM D2240-04	60±5	62
Tensile strength (PSI)	ASTM D4894	15 (min)	4600
Elongation (%)	ASTM D4894	NA	450
Specific gravity (g/cm3)			2,16
Deformation under L 2175 psi – 100hrs			9%

5. Gasket design

The design of a gasket looks relatively simple, but it's the first step of a very important process. If the design is not done properly it eventually can lead to many problems. The fit of a gasket in the ferrules is important for the alignment of your tubing. The thickness in combination with the inner dimension can cause recess or intrusion when compressing the gasket. How compressible the gasket is, depends on the material.

Dimensional differences by material

Our gaskets can have some slight dimensional deviations when comparing them to the given standards, which we did on purpose. Every material and every size behaves differently. So we have chosen the right dimensions of every gasket separately, through extensive testing. To eventually get the best intrusion category (as flush as possible).
For example, because soft materials (elastomers like EPDM) are much more compressible than hard materials (PTFE) we make the inner diameter of elastomeric materials bigger than those made of PTFE. So that, once compressed, both gasket will have a flush interface.

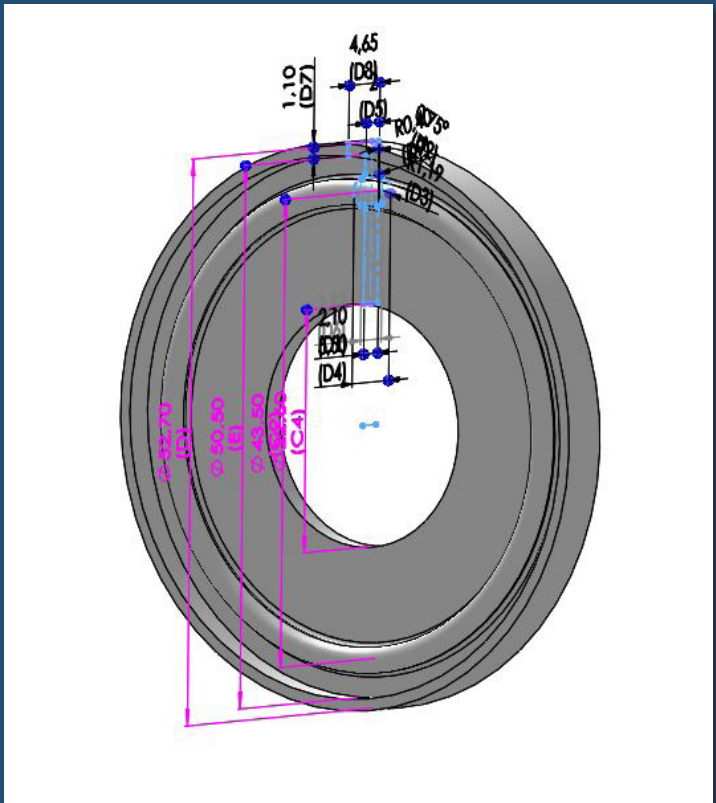

Flush, Negative recess or Positive intrusion

In an ideal world the inner dimension of a gasket should be flush with the inner dimension of the stainless steel tubing (See image). But we know from experience that this is far from what is happening in the real world.
There are some standards in the industry for the design of sanitary gaskets as stated in the 'ASME BPE – Bioprocessing Equipment: 2022':

On initial installation a hygienic seal shall provide a substantially flush interface with the hygienic clamp ferrules. Hygienic seals shall meet and designated by one of the following intrusion categories when tested by the seal manufacturers:

a) Intrusion category I. Seals having a maximum intrusion/recess of 0.025 in. (0.6 mm)

b) Intrusion category II. Seals having a maximum intrusion/recess of 0.008 in. (0.2 mm)

We think that the only way to provide the perfect seal is years of experience with materials, designing, manufacturing and testing. And supplying the right gasket is just as important as providing the guidelines for installing them correctly.

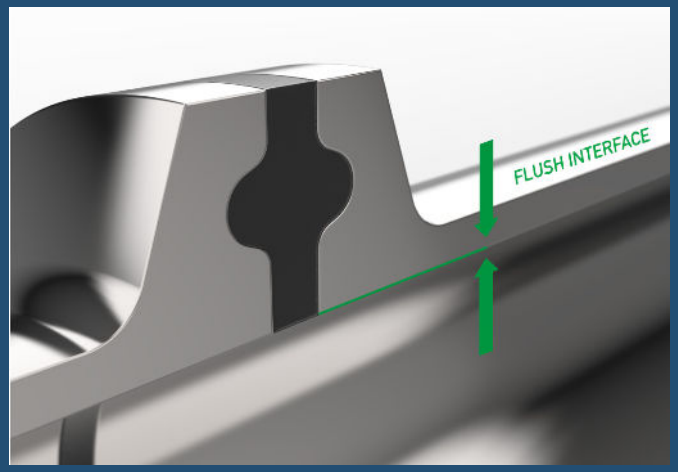

When the inner dimension of a gasket is too small it will create negative recess (upper image). There is a big risk entrapment of material in a dead space that can lead to microbial growth and contamination.

Excessive intrusion (lower image) into the process stream may lead to erosion of the gasket. The steam and fluids are very abrasive and will eventually attack the gaskets making it to fall apart. The rubber particles will end up somewhere in your system, thereby contaminating the product.

Intrusion of the gasket also acts as a venturi, accelerating the centre and reducing the outside velocity dramatically and changing the flow from laminar to turbulent.
The amount of intrusion depends on multiple parameters:

- the dimensional control of the seal,
- the ferrule dimensions,
- the amount of torque applied to the flange,
- the material properties of the seal,
- the application of steam,
- the alignment of the ferrules,
- the surface of the seal (wet or dry) during installation.

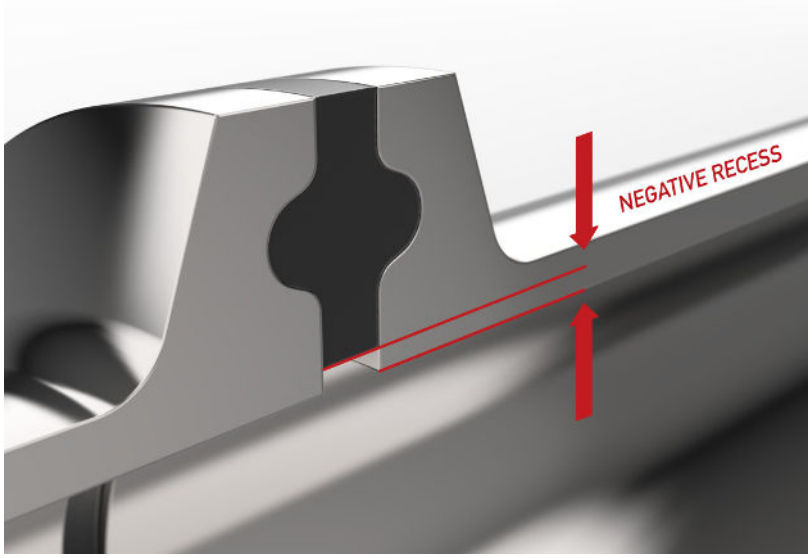

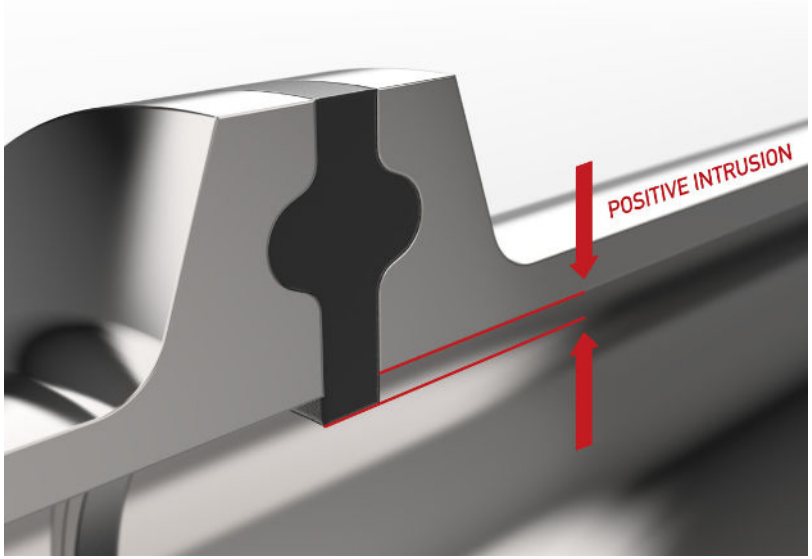

Testing

Our test center here at Ultrapharma is running full time. Everything that we develop will undergo rigorous testing before entering the market. Testing new gaskets, new compounds or just copying a customer's problem, so we can come up with a solution. We can test our products in conditions that mimic real-life applications, in one of our modular SIP systems or the autoclave. So that we are completely confident that we deliver what we promise.
The images on the right clearly shows the importance of testing and to determine the right guidelines for installing gaskets. The top image shows that it is possible to have a lot of material in your pipeline, when not installing correctly. Which obviously can cause numerous of problems.

Over-compression & Misalignment

In a perfect world where all connections are perfectly aligned and access to the connection is easy, we would not be talking about over-compression. Unfortunately in the real world, it is slightly different. Piping is hardly ever aligned perfectly, so we have to use force to bring ferrules together and make a leak proof connection. The force we apply comes from the clamp that we us to bring two parts together. Each sealing material has compression limitations, which means you cannot endlessly keep on closing the clamp around the ferrules. By doing so you destroy the gasket.

This is a common problem with elastomeric gaskets. The typical shape of the Tri-Clamp and the ferrules are designed to match. Both components have a built-in 20° angled surface so when the wing nut is closed. The clamp slides over the surface of the ferrule compressing the gasket in an axial direction. In theory, until the gasket is flush with the internal diameter of the pipe illustrated in figure 1. In the real world, it is impossible to know when the gasket is flush with the ID, simply because we can´t look inside the pipe-work.

As the human mind seeks security and therefore we apply a couple more turns to the wing-nut, this pushes the gasket over the edge creating a situation as illustrated in figure 2. The gasket material is now inside the flow path.

We can advise you with the recommended torque for each specific size and compound.

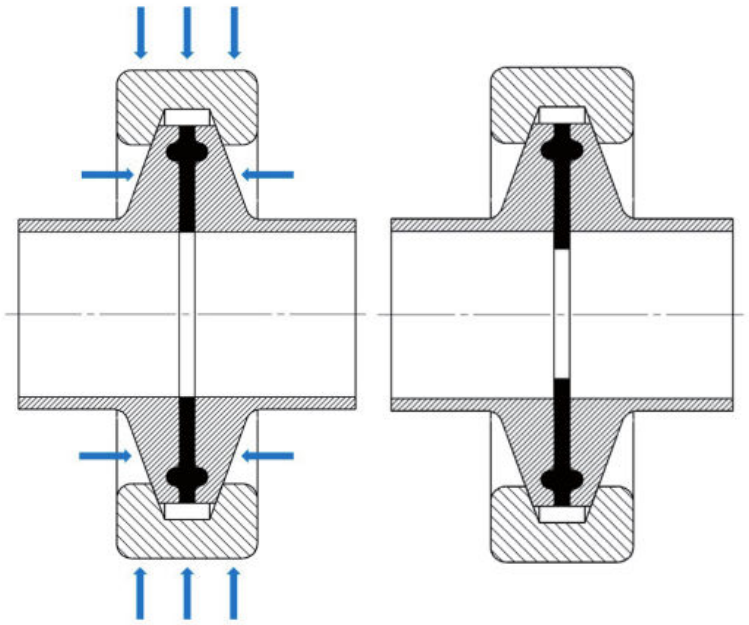

Due to misalignment, we are exposing the gasket to uneven forces. As you can witness in the images the bottom side of the gasket is compressed much more than the top part. This results in a situation where there is gasket material pushed inside the tubing causing a ridge. This ridge has a significant impact on the performance of the whole system. The flow capacity is reduced and the chances of solid material building up on both sides of the gasket are eminent.

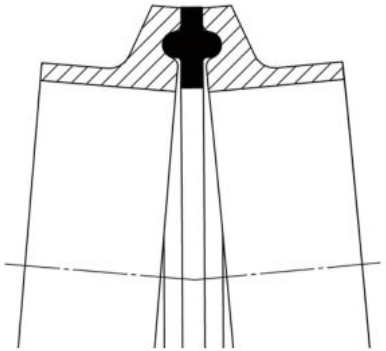

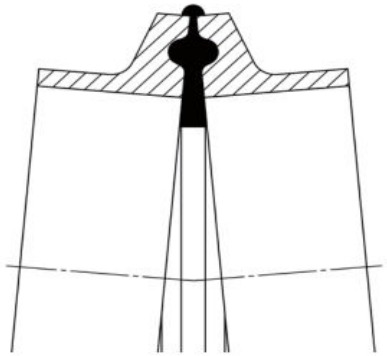

Resolutions

The first step is using a torque wrench or our preset Torque-Knob. The Torque Knob prevents over-compression by setting a Torque limit. Depending on the gasket material you choose the specific Torque in Nm. Turn until it starts clicking. By using the Torque Knob you introduce consistency in your system. The clean ability increases dramatically because of less gasket intrusion in the flow path. More information can be found in the Torque-Knob brochure.

In case of misalignment problems, we recommend utilizing our Snap-On gaskets. These gaskets can be exposed to extreme compression when closing a difficult connection. The plastic ring protects the elastomer gasket against destruction. More information can be found in the Snap-On brochure.

Lastly, we can recommend using our patented invention the Elasto-Clamp. This clamp has unique features and will protect your system against gasket intrusion. More information can be found in the Elasto-clamp brochure.

6. Type 1, 2 & 3 (unflanged & flanged & double flanged)

Originally the design of all DIN 32678 (REIHE A) and ISO 1127 (REIHE B) TC gaskets are standard with flange. And the design of ASME-BPE (REIHE C) TC gaskets are standard without flange.
One advantage of flanged gaskets is that the installation can be a little bit easier, because the flange ensures that the gasket won't fall off one of the two ferrules when installing or dismantling the system.
We can supply almost all of our compounds and sizes (DIN, ISO or ASME) as a Type 1 gasket (Unflanged) or in a Type 2 gasket (Flanged).

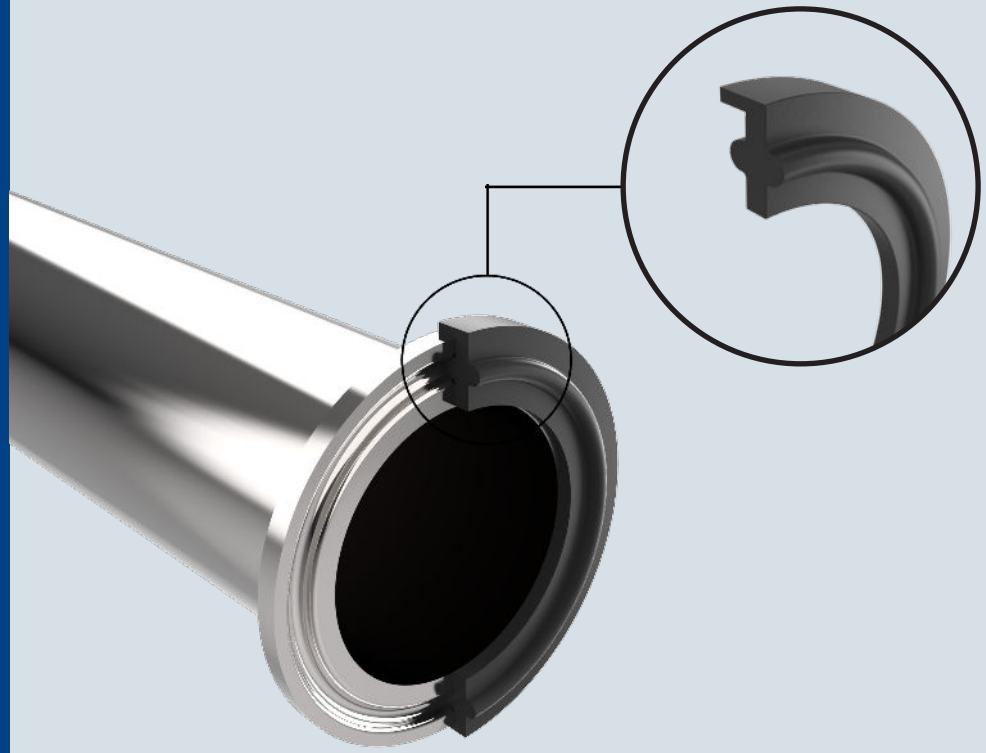

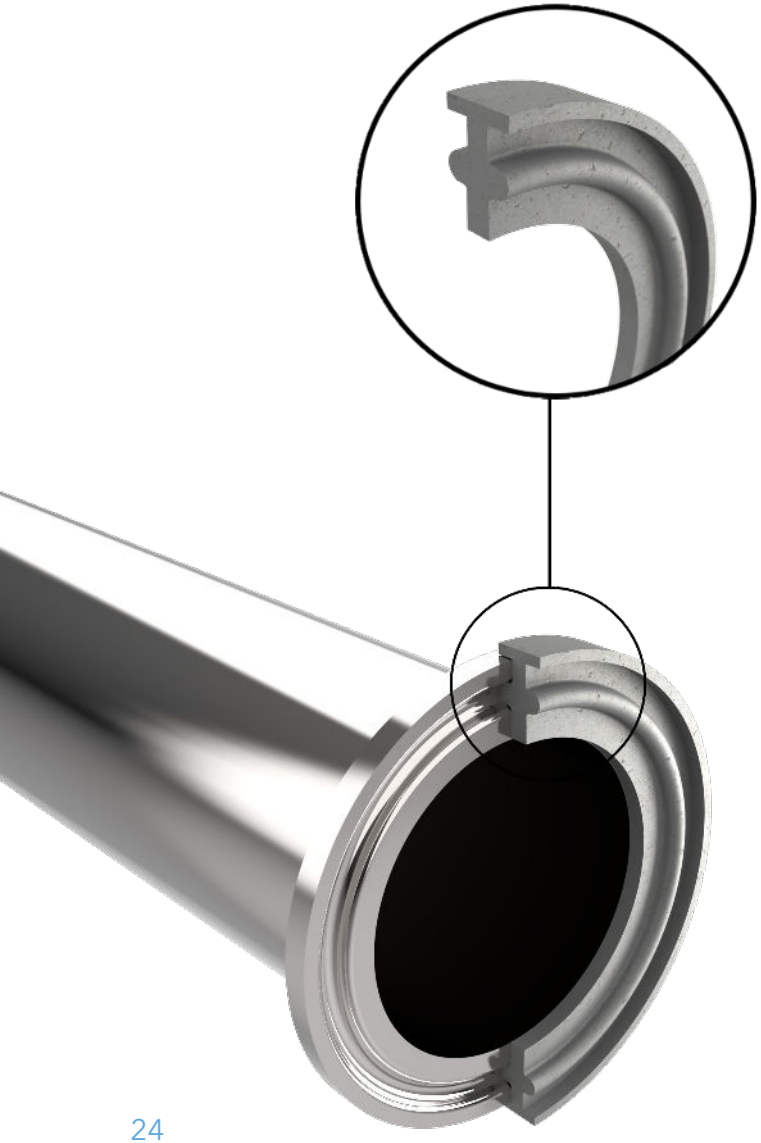

The type 3 (double flange) gasket is only available in the material Steam-Flon® . Steam-Flon® is a relatively hard material and can therefore cause problems with sealing when misalignment of pipelines is eminent.
We are therefore introducing a solution to fix the misalignment issue and therewith improve the sealing ability at lower torque levels. The Steam-Flon® Type-III gasket has not one, but two lips: one on either side. So whereas the Type I unlipped competition gasket allows for large side way movement of the ferrules, making the misalignment even more imminent, the Type-III gasket doesn't allow for any leeway and therefore creates the ultimate condition for a perfect seal.

The new Steam-Flon® Type-III gasket seals 10 bar pressure at approximately half the torque level of standard Type-I seals in larger diameters.

7. UP Partnr. Configurator

	STANDARD	MATERIAL -		SIZE				
	UPXX	XXX	-	xxx /	xxx /		DNxx	DNxx
ASME BPE (REIHE C)	UP40	MPE	EPDM TYPE I	25	←	¼"	DN06	DN12
ASME BPE MINI (REIHE C)	UP42	MPFE	EPDM TYPE II	50		½"	DN08	DN18
ISO 1127 (REIHE B)	UP11	RXPX	PL. SILICONE TYPE I	75		¾"	DN08	DN25
DIN 32676 (REIHE A)	UP32	RXPXF	PL. SILICONE TYPE II	→	100	1"	DN12	DN33,7
SMS 3017	UP30	MPX	PER. SILICONE TYPE I		150	1½"	DN14	DN38
		MPFX	PER. SILICONE TYPE II		200	2"	DN15	DN51
		MPSFY	FKM TYPE I		250	2½"	DN16	DN63,5
		MPFSFY	FKM TYPE II		400	4"	DN18	DN76,1
		MPU	NBR TYPE I		450	4½"	DN20	DN88,9
		MPFU	NBR TYPE II		500	5"	DN25	DN101,6
		MPG	PTFE TYPE I		550	5½"	DN32	DN114,3
		MPFG	PTFE TYPE II		600	6"	DN40	DN139,7
		MPG-SF	STEAM-FON TYPE I		800	8"	DN50	DN168,3
		MPFG-SF	STEAM-FON TYPE II		1000	10"	DN65	DN219,1
		MPFFG-SF	STEAM-FON TYPE III		1200	12"	DN80	
		MPGRE	ENVELOPE PTFE + EPDM TYPE I				DN100	
		MPFGRE	ENVELOPE PTFE + EPDM TYPE II				DN125	
		MPGRV	ENVELOPE PTFE + FKM TYPE I				DN150	
		MPFGRV	ENVELOPE PTFE + FKM TYPE II				DN200	
		MPGRTB	TRI-BOND PTFE + FKM TYPE I				DN250	
		MPFGRTB	TRI-BOND PTFE + FKM TYPE II				DN300	
		MPGRTB-E	TRI-BOND PTFE + EPDM TYPE I					
		MPFGRTB-E	TRI-BOND PTFE + EPDM TYPE II					

EXAMPLES

UP30RXPX-DN51
UP30 = SMS 3017
RXPX = PL. SILICONE
R = TYPE I
DN51 = 64X49MM

UP32MPFE-DN25
UP32 = DIN 32676
MPE = EPDM
F = TYPE II
DN25 = 50.5X26.2MM

UP40MPFFG-SF-600
UP40 = ASME BPE
MPG-SF = STEAM-FLON
FF = TYPE III
600= 6" = 167X146,9MM

UP42MPGRE-050
UP42 = ASME BPE MINI
MPGRE = ENVELOPE PTFE + EPDM
50 = ½" = 22X9.6MM

8. Dimensional Chart

							ELASTOMER	PTFE
DIN 32676	ISO 1127	ASME-BPE	SMS 3017	BS 4825	E	C2	C4	C4
DN06 *					22	20,2	4,2	4
w		1/4"			22	20,2	5,1	4,7
DN08 *					22	20,2	6,2	6
	DN07				22	20,2	7,2	7
DN10 *		3/8"			22	20,2	8,2	8
	DN08				22	20,2	10,5	10,3
		1/2"		1/2"	22	20,2	10,8	9,6
DN12 *			DN12 *		22	20,2	10,2	10
DN14 *					22	20,2	12,2	12
DN16 *	DN10				22	20,2	14,2	14
DN18 *		3/4"	DN18 *	3/4"	22	20,2	16,2	16
DN08 *					34	27,5	-	8
DN10					34	27,5	10,2	10
	DN08 *				34	27,5	10,5	10,3
	DN10 *				34	27,5	14,2	14
DN15					34	27,5	16,2	16
	DN15 *				34	27,5	18,2	18,1
DN20					34	27,5	20,2	20
DN1" *					34	27,5	22,5	22,2
DN10 *					50,5	43,5	10,3	10
	DN08 *				50,5	43,5	10,5	10,3
	DN10 *				50,5	43,5	14,2	14
DN15 *					50,5	43,5	16,2	16
	DN15				50,5	43,5	18,4	18,1
DN20 *					50,5	43,5	20,2	20
		1"		1"	50,5	43,5	22,5	22,2

							ELASTOMER	PTFE
DIN 32676	ISO 1127	ASME-BPE	SMS 3017	BS 4825	E	C2	C4	C4
			DN25		50,5	43,5	23	22,8
	DN20				50,5	43,5	23,9	23,7
DN25					50,5	43,5	26,2	26
	DN25				50,5	43,5	29,9	29,7
			DN33,7		50,5	43,5	31,7	31,5
DN32					50,5	43,5	32,2	32
		1,5"		1,5"	50,5	43,5	35,3	35
			DN38		50,5	43,5	36	35,8
DN40					50,5	43,5	38,2	38
	DN32 *				50,5	43,5	38,6	38,4
	1" *				64	56,5	22,5	-
	DN32				64	56,5	38,6	38,4
		DN40			64	56,5	44,5	44,3
		2″		2"	64	56,5	47,8	47,6
			DN51		64	56,5	49	48,8
DN50					64	56,5	50,2	50
	DN50				77,5	70,5	56,5	56,3
		2,5″		2,5"	77,5	70,5	61	60,3
			DN63,5		77,5	70,5	60,7	60,5
DN65					91	83,5	66,2	66
	DN65				91	83,5	72,3	72,1
		3″		3"	91	83,5	73,5	72,9
			DN76,1		91	83,5	73,3	73,1
DN80					106	97	81,2	81
	DN80				106	97	85,1	84,3
			DN88,9		106	97	85,3	85,1
		4″		4"	119	110	98,2	97,4

							ELASTOMER	PTFE
DIN 32676	ISO 1127	ASME-BPE	SMS 3017	BS 4825	E	C2	C4	C4
			DN101,6		119	110	98	97,8
DN100					119	110	100,2	100
DN115 *	DN100				130	122	110,5	109,7
		4.5″ *		4,5"	130	122	110,5	110,3
			DN114,3		130	122	110,7	110,5
		5″ *		5" *	144	134,5	125,4	125
DN125					155	146	125,4	125
	DN125				155	146	134,7	134,5
		5.5″ *		5,5"	155	146	135,9	-
			DN139,7		155	146	136,1	135,9
		6″			167	156,5	147,2	146,9
DN150					183	174	150,4	150
	DN150			6,625"	183	174	163,4	163,2
			DN168,3		183	174	163,5	163,3
		8″ *			217,4	207	198	197,7
DN200					233,5	225	200,2	200
	DN200			8,625″	233,5	225	214,3	213,9
			DN219,1		233,5	225	214,3	214,1
		10" *			268	257,8	247,4	247,2
DN250 *					268	257,8	250,2	250
	DN250 *			10,625" *	286	276	268	267,8
		12" *			319	308,6	298,2	298
DN300 *					319	308,6	300,2	300
	DN300 *			12,625" *	338	328	318,9	318,7

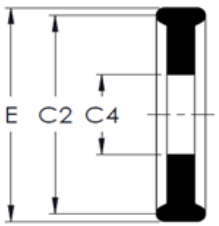

Tri-Clamp® Mini Gasket

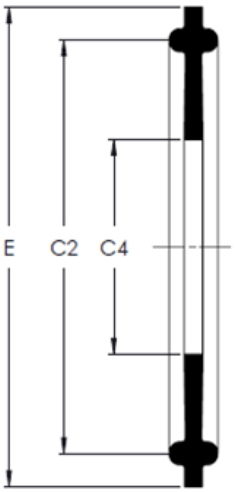

Tri-Clamp® Type I Gasket

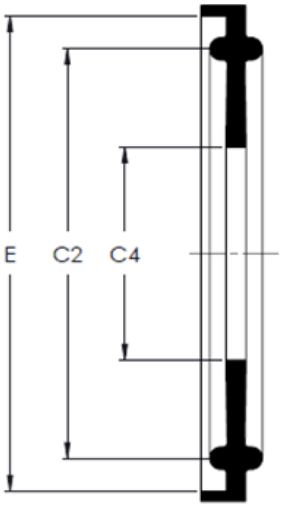

Tri-Clamp® Type II Gasket

QUILINOX®
ALL ABOUT FLUIDS

963 650 127
quilinox@quilinox.com
www.quilinox.com